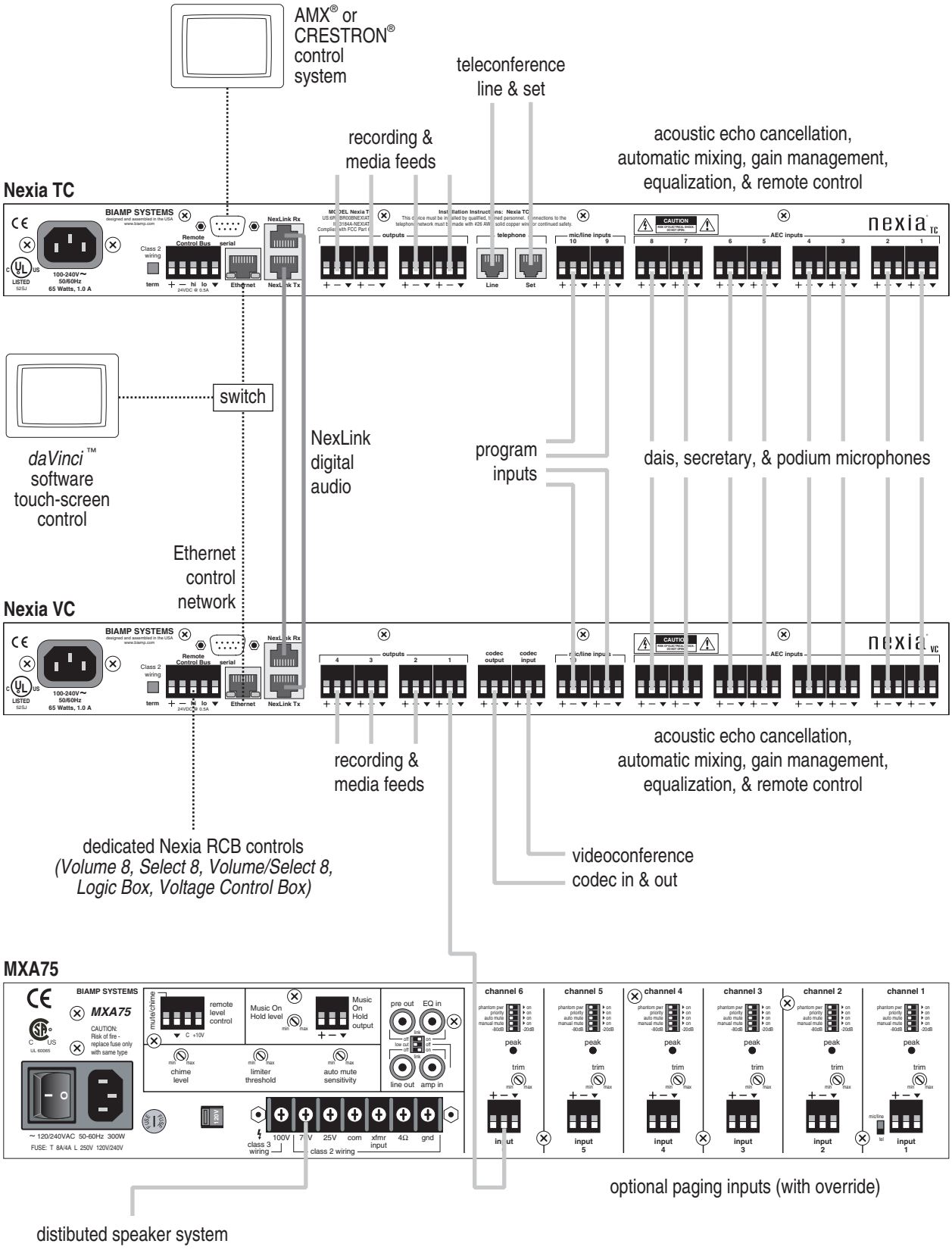COUNCIL MEETING/PRESENTATION SYSTEM