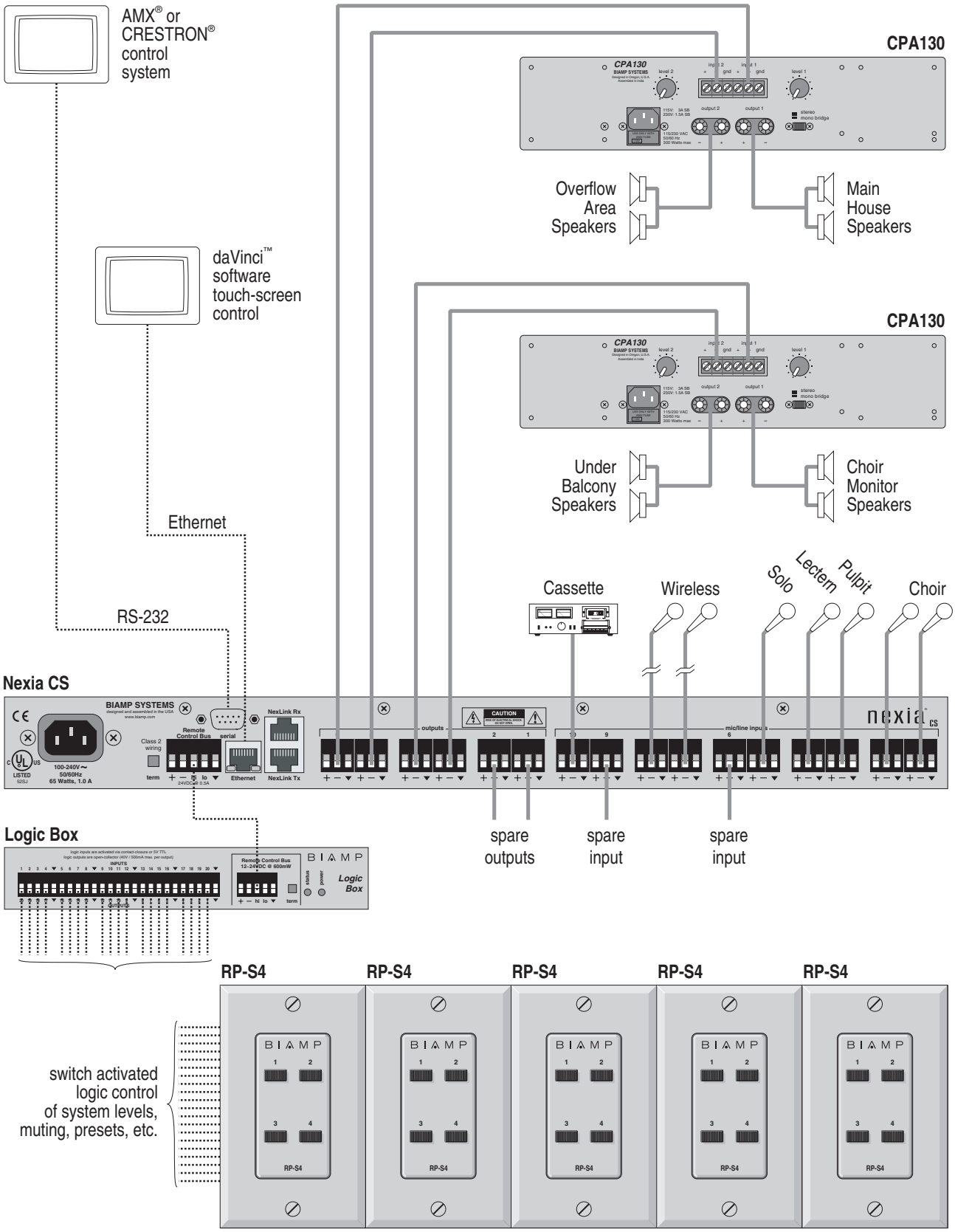HOUSE OF WORSHIP SYSTEM – Four Speaker Zones and Remote Control Options